Aktuel® TURNSTILE



SWG - 15

MOTORIZED SWING GATE

ONE DIRECTION

Your gate to protection...

Motorized One Direction Swing Gates are provides an alternative to regulate pedestrian traffic. Thanks to its compact design and 90 cm arm length which is compatible with international wheelchair standards, SWG - 15 is an ideal solution to provide controlled passage for VIP and physically handicapped people.

Swing Gates are applicable in shopping malls, supermarkets, fitness/wellness centers with its aesthetic and user friendly design.

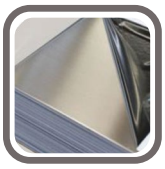

Design

- Turnstile main body is manufactured from 304 grade stainless steel and turnstile arm is manufactured from aluminium.
- Stain case design with smoothened corner.
- All other parts in turnstile are electro-galvanized against corrosion.



Safety

- Electrical and mechanical safety is provided in the turnstile.
- Heavy duty mechanics, controlled by reliable electronics ensure a long product life with minimum maintenance requirement.

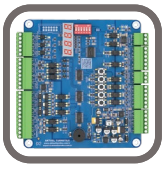

Integration

- Easy integration with all access control equipment through functional electronic control board
  (For example: RFID Device, Button Control, Remote Control, Sensor)

Aktuel TURNSTILE

SWG - 15

Technical Specifications

Main Body

Material	AISI- 304 - Stainless Steel - Scotch Brite (Op. AISI-316 Quality)
Arms	Aluminium
Rotor Systems	With rotating control; arms are positioned at 90 degrees
Rotation Control	The main movement mechanism is provided by 24V DC Motor
Standard Dimensions (W x L x H)	15 x 25 x 115 cm
Standard Passageway Width	900 mm (Arm Lenght : 850 mm)

Electrical Parameters

Operating Voltage	110 / 220 - 240V AC 50/60 Hz (+/- %10) - 24V DC (Max 30W)
Nominal / Max Current	250Ma / 850 Ma
Power Consumption	30 W
Mean Cycles Between Failure (MCBF)	1M Cycles

Function Working

Control Systems	All inputs are opto-coupler protected. Controlled by dry contact or grounding input. Compatiable with all access control systems that provide dry contact or grounding outputs
Speed Control	Motor start and stop control is maintained by PWM microprocessor control sysyem
Passage Direction	One Direction operation feature. Entrance-Exit
Time out Delay	Adjustable ; Operating Modes (7 - 14 - 21 second)
Flow Rate	30 Passage / Minutes / Normally Standard
Emergency Mode	When the emergency button is used, the arm remains open to the exit direction.
Operating Temperature	-20° C / + 50° C
Operating Humiditiy	0 / + 45° C (RH 95% not-condensing)
IP Rating	IP - 54
Working Environment	Indoor
Indicators Features	Entrance - Green Arrow / Exit - Red Cross

Operation — Uni-directional ☑ — Bi-directional ☐

Optional Accessories

Remote Control, Button Control, Separator, Floor Mounting Plate

Optional Available Signals

"Pass" "Stop" "Disabled" "Emergency"

"Design and specifications are subject to change without notice"

Aktuel TURNSTILE

SWG - 15

Technical Drawing

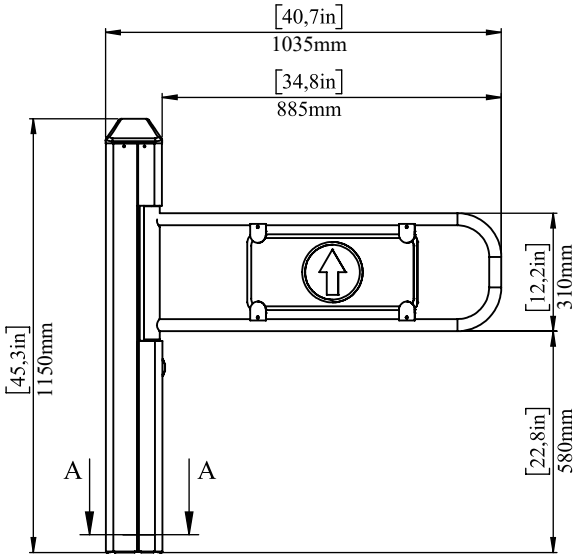

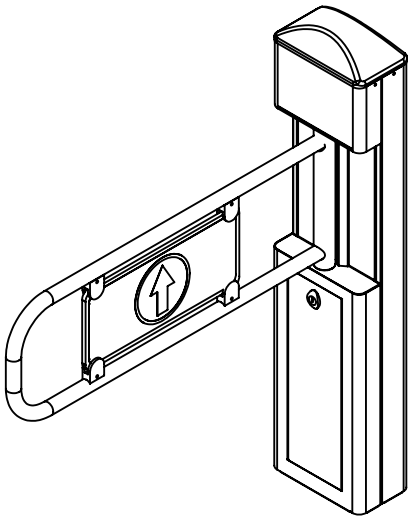

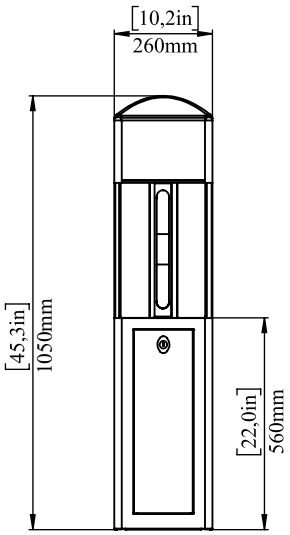

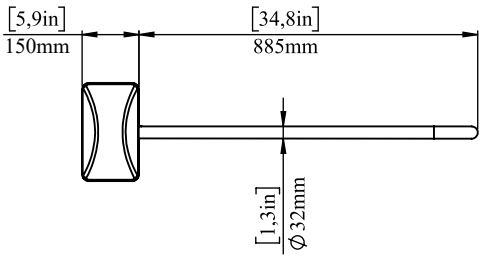

SECTION A-A

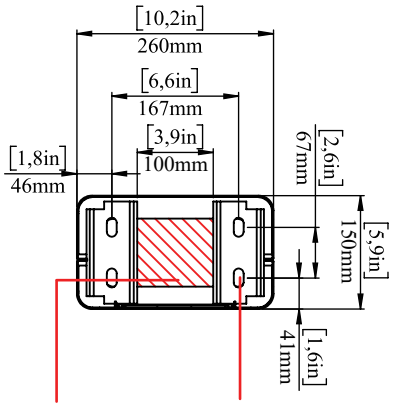

Cable Access
3x0.75 mm²

Ground Mounting Holes
M10x4

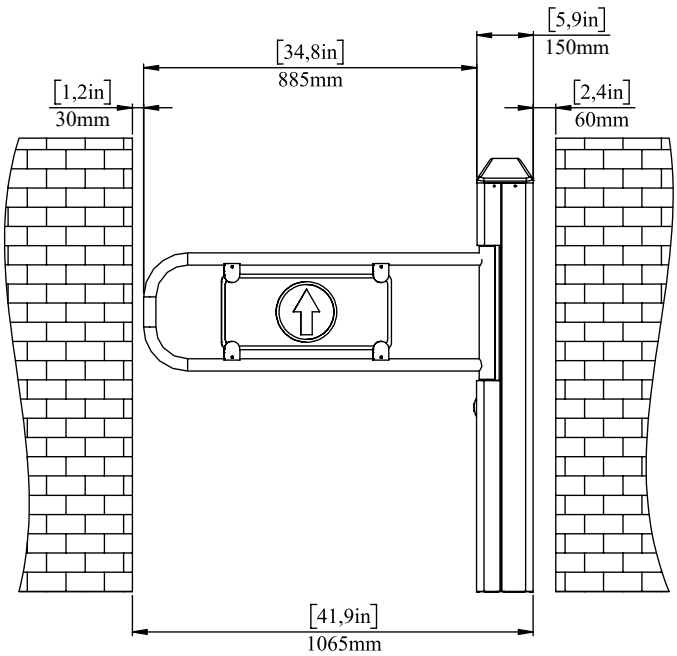

"Design and specifications are subject to change without notice"

"Option 1"

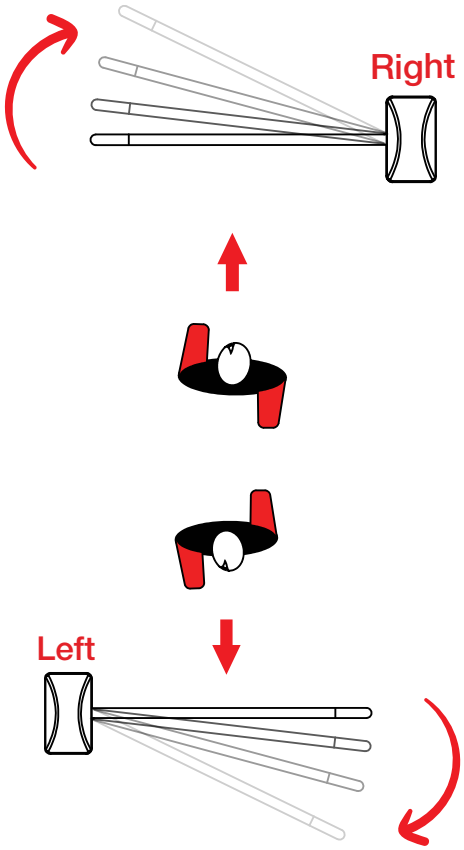

"Option 2"

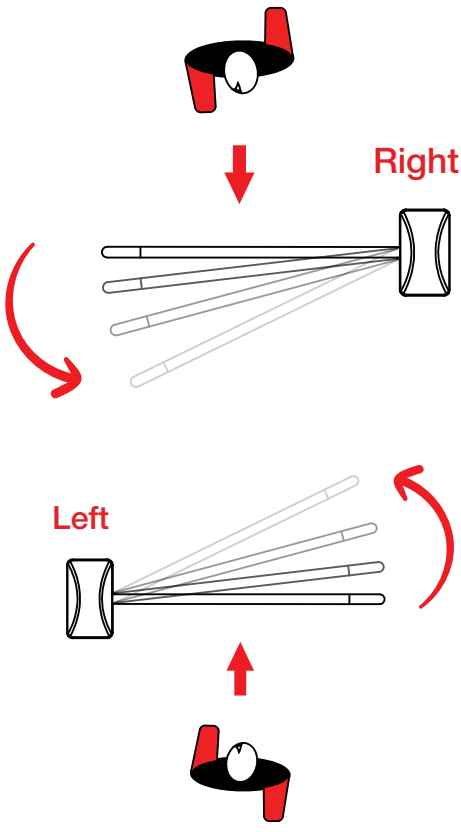

"Design and specifications are subject to change without notice"



Aktuel® TURNSTILE

Your Gate to Protection...



Usage Areas

- Fitness Centers
- Wellness Centers
- Supermarkets
- Shopping Malls

Benefits

- Arm length is usefull for physically handicapped people
- Restricts access to secured zones
- Automation of pedestrian access control

Certificates

- ISO 9001
- CE
- 2 YEARS WARRANTY
- MADE IN Turkey

Factory

Ivedik OSB Agac Isleri San. Sit. 1333.Cad. No:25 Ostim - Yenimahalle
ANKARA - TURKEY

+90 312 395 02 88 +90 312 395 02 70

Branch

Perpa Ticaret Merkezi A Blok - Kat:7-8 No:758 Sisli - ISTANBUL - TURKEY

+90 212 320 69 79 +90 212 320 69 79

www.aktuelturnike.com export@aktuelturnike.com.tr

Local Reseller