

Aktuel®
TURNSTILE

HALF HEIGHT TURNSTILE

AKT - 1250 | AKT - 1300 | AKT - 1350 SERIES

Your gate to protection...

Half Height Type Turnstiles are durable products that can be used indoors and outdoors. Provides access and access control in areas requiring high levels of security.

The proven Half Height Type Turnstiles provide robust solutions for controlled and high-security passage with intensive use and ability to handle crowds in places such as trade centers, prisons, stadiums, government, industrial buildings or private offices.

Design



- Stain case design with smoothened corner.
- All other parts in turnstile are electro-galvanized against corrosion.

Safety



- Electrical and mechanical safety is provided in the turnstile.
- Heavy duty mechanics, controlled by reliable electronics ensure a long product life with minimum maintenance requirement.

Integration



- Easy integration with all access control equipment through functional electronic control board (For example: RFID Device, Button Control, Finger Print and Biometric Device)

AKT - 1250

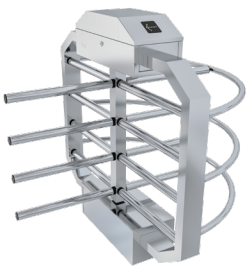

304 Stainless Steel

- Turnstile main body and arms 304 stainless steel.
- Optional 316 stainless steel option for outdoor use.
- Suitable for indoor and outdoor use with low humidity.

AKT - 1300



Painted

- Turnstile main body and arms painted.
- Paint Codes: 9016, 7032, 7035, 7001, 9005,1023, 1028, 2004, 3020, 3002, 5015, 6018, 7016
- Suitable for indoor and outdoor use with low humidity.

AKT - 1350



Painted Body Rotor - Arms Stainless Steel

- Turnstile main body painted, arms 304 stainless steel.
- Paint Codes: 9016, 7032, 7035, 7001, 9005,1023, 1028, 2004, 3020, 3002, 5015, 6018, 7016
- Suitable for indoor and outdoor use with low humidity.

Aktuel TURNSTILE

AKT - 1250
AKT - 1300
AKT - 1350

Technical Specifications

Main Body

Material	AISI- 304 - Stainless Steel - Scotch Brite (Op. AISI-316 Quality)
Tripod Arms	Q32 mm dia - Stainless Steel - Arms can be dismantled or mounted one by one separately
Rotor Systems	With rotating control; tripod arms are positioned at 90 degrees
Turnstile Arms	Produced by Ø42 - 1.5 mm material.
Rotation Control	Self centering and smooth operation is handled by means of spring and hydraulic damping mechanism
Standard Dimensions (W x L x H)	118 x 125 x 119 cm
Standard Passageway Width	520 mm (Arm Lenght : 470 mm)

304

Electrical Parameters

Operating Voltage	110 - 240V AC 50/60 Hz (+/- %10)
Nominal / Max Current	250Ma / 850 Ma
Power Consumption	30 W
Mean Cycles Between Failure (MCBF)	1M Cycles

24V DC
30 W

Function Working

Control Systems	All inputs are opto-coupler protected. Controlled by dry contact or grounding input. Compatiable with all access control systems that provide dry contact or grounding outputs
Output Data (Feedback)	The systems provides dry contact, NO - Normally Open, entry - exit passage feedback by relays
Passage Direction	Bi-Directional operation feature. Entrance-Exit
Time out Delay	Adjustable ; Operating Modes (7 - 14 - 21 second)
Flow Rate	20 Passage / Minutes / Normally Standard
Emergency Mode	System allows free passage in emergency mode and in case of power failure
Indicators Features	Entrance - Green Arrow / Exit - Red Cross
Communication	RS 232 (Need PC Systems hardware serial port)
Operating Temperature	-20° C / + 50° C
Operating Humiditiy	0 / + 45° C (RH 95% not-condensing)
IP Rating	IP - 54
Working Environment	Indoor
Number of Passage Lanes	Single Unit ☑ Double Unit ☐

2 way control

20 per/min

+50° C
-20° C

IP 54

Optional Accessories

Remote Control, Button Control Unit, Interface Unit for PC-RS 232, Counter, Alarm Sensor, Heater Positive Unit, Card Reader Pole, Floor Mounting Plate, Special Top Cover Design (Card Reader, Finger Print, etc...)



Operation Modes

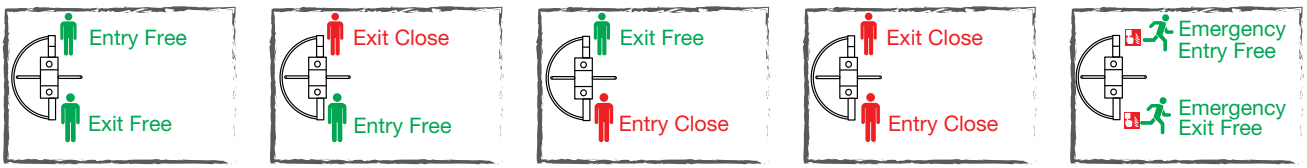

"Design and specifications are subject to change without notice"

Aktuel TURNSTILE

AKT - 1250
AKT - 1300
AKT - 1350

Technical Drawing

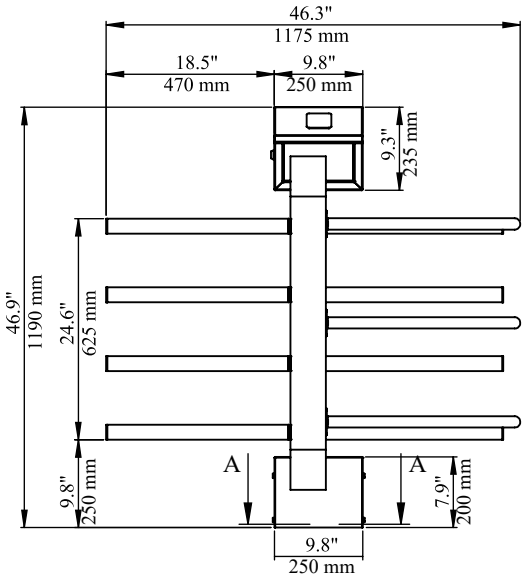

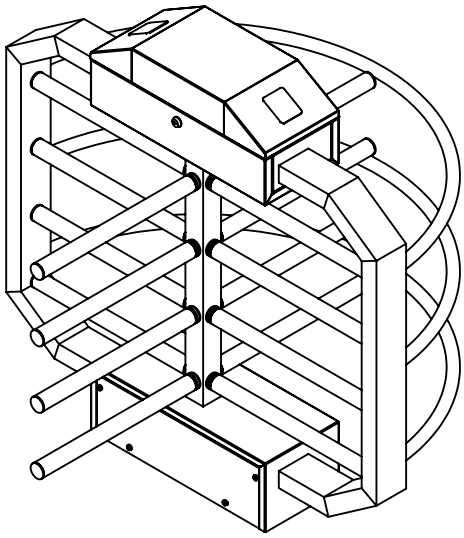

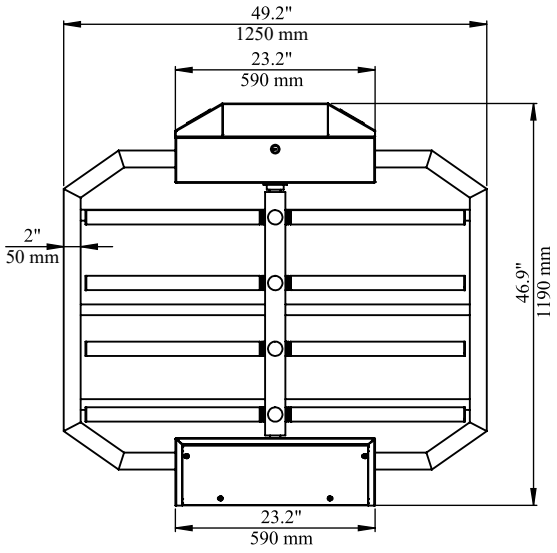

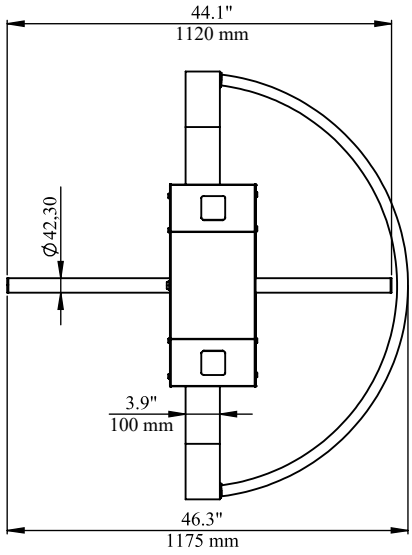

SECTION A-A

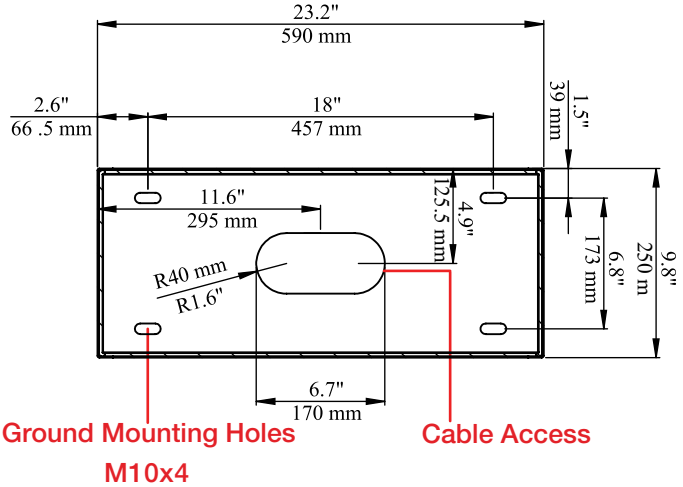

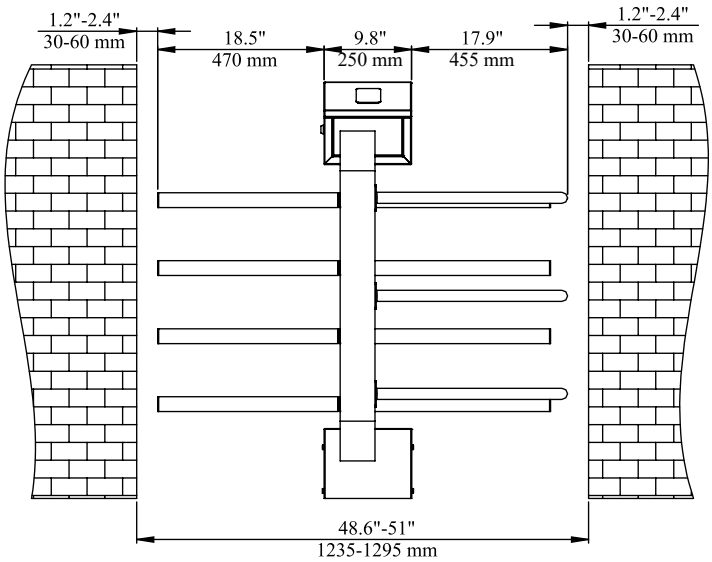

"Design and specifications are subject to change without notice"

Aktuel® TURNSTILE

Your Gate to Protection...

Usage Areas

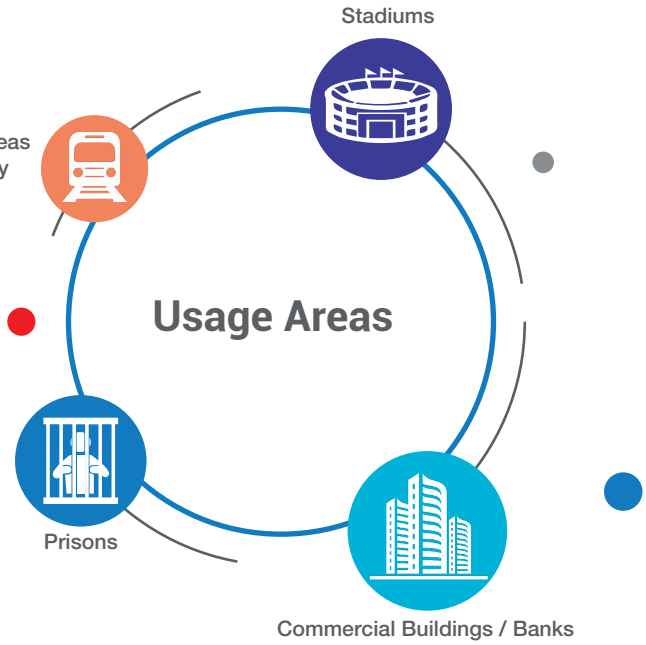

Benefits

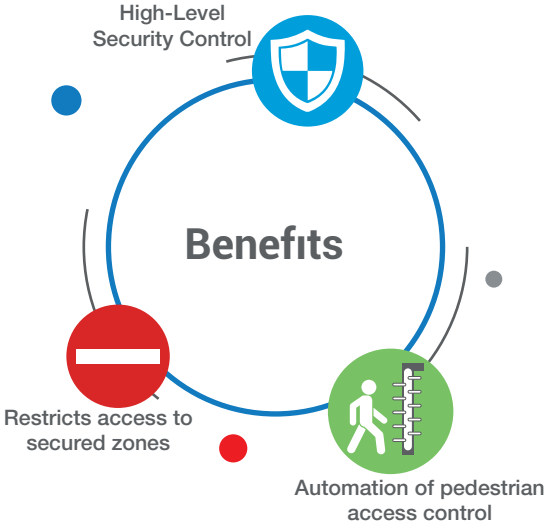

Certificates

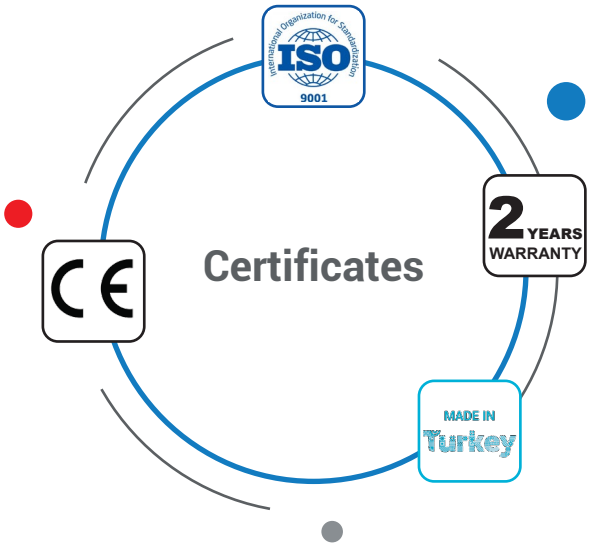

Factory

Ivedik OSB Agac Isleri San. Sit. 1333.Cad. No:25 Ostim - Yenimahalle
ANKARA - TURKEY

+90 312 395 02 88 +90 312 395 02 70

Branch

Perpa Ticaret Merkezi A Blok - Kat:7-8 No:758 Sisli - ISTANBUL - TURKEY

+90 212 320 69 79 +90 212 320 69 79

www.aktuelturnike.com export@aktuelturnike.com.tr

Local Reseller